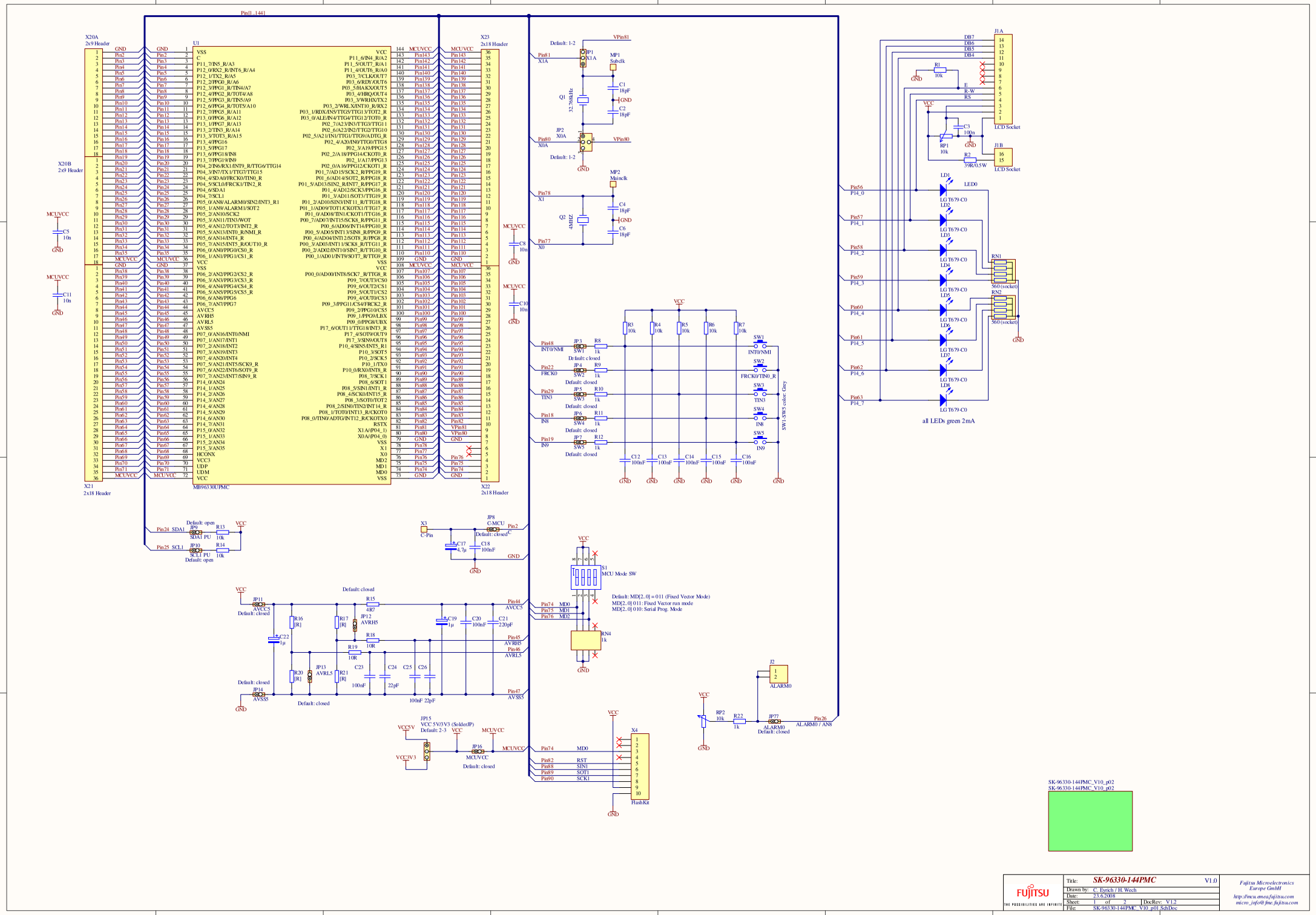
Pin[1..144]
X20A
2x9 Header
X20B
2x9 Header
X21
2x18 Header
U1
MB96330UPMC
X23
2x18 Header
X22
2x18 Header
MCUVCC
C5
10n
C11
10n
C8
10n
C10
10n
GND
VPin81
Default: 1-2
JP1
X1A
MP1
Subclk
C1
18pF
C2
18pF
Q1
32.768kHz
JP2
X0A
VPin80
MP2
Maincl
C4
18pF
C6
18pF
Q2
4MHZ
Pin81
X1A
Pin80
X0A
Pin78
X1
Pin77
X0
VCC
R3
10k
R4
10k
R5
10k
R6
10k
R7
10k
Pin48
INT0/NMI
JP3
SW1
R8
1k
Default: closed
Pin22
FRCK0
JP4
SW2
R9
1k
Default: closed
Pin29
TIN3
JP5
SW3
R10
1k
Default: closed
Pin18
IN8
JP6
SW4
R11
1k
Default: closed
Pin19
IN9
JP7
SW5
R12
1k
Default: closed
C12
100nF
C13
100nF
C14
100nF
C15
100nF
C16
100nF
SW1-SW5 color: Grey
J1A
LCD Socket
J1B
LCD Socket
R1
10k
C3
100n
RP1
10k
R2
39R/0.5W
LD1
LED0
LD2
LD3
LD4
LD5
LD6
LD7
LG T679-C0
RN1
560 (socket)
RN2
560 (socket)
all LEDs green 2mA
Pin56
P14_0
Pin57
P14_1
Pin58
P14_2
Pin59
P14_3
Pin60
P14_4
Pin61
P14_5
Pin62
P14_6
Pin63
P14_7
Pin24 SDA1
JP9
SDA1 PU
R13
10k
Default: open
Pin25 SCL1
JP10
SCL1 PU
R14
10k
Default: open
X3
C-Pin
JP8
C-MCU
Default: closed
C17
4.7µ
C18
100nF
Pin2
JP11
AVCC5
Default: closed
R15
4R7
Pin44
AVCC5
R16
[R]
R17
[R]
JP12
AVRH5
C19
1µ
C20
100nF
C21
220pF
C22
1µ
R18
10R
Pin45
AVRH5
R19
10R
Pin46
AVRL5
R20
[R]
JP13
AVRL5
R21
[R]
C23
100nF
C24
22pF
C25
C26
100nF 22pF
JP14
AVSS5
Default: closed
Pin47
AVSS5
S1
MCU Mode SW
Default: MD[2..0] = 011 (Fixed Vector Mode)
MD[2..0] 011: Fixed Vector run mode
MD[2..0] 010: Serial Prog. Mode
Pin74 MD0
Pin75 MD1
Pin76 MD2
RN4
1k
VCC5V
VCC3V3
JP15
VCC 5V/3V3 (SoklerJP)
Default: 2-3
JP16
MCUVCC
Default: closed
X4
FlashKit
Pin74 MD0
Pin82 RST
Pin88 SIN1
Pin89 SOT1
Pin90 SCK1
J2
ALARM0
RP2
10k
R22
1k
JP77
ALARM0
Default: closed
Pin26
ALARM0 / AN8
SK-96330-144PMC_V10_p02
SK-96330-144PMC_V10_p02
FUJITSU
THE POSSIBILITIES ARE INFINITE
Title: SK-96330-144PMC V1.0
Drawn by: C. Eyrich / H. Wech
Date: 23.6.2008
Sheet: 1 of 2
DocRev: V1.2
File: SK-96330-144PMC_V10_p01.SchDoc
Fujitsu Microelectronics Europe GmbH
http://mcu.emea.fujitsu.com
micro_info@fme.fujitsu.com

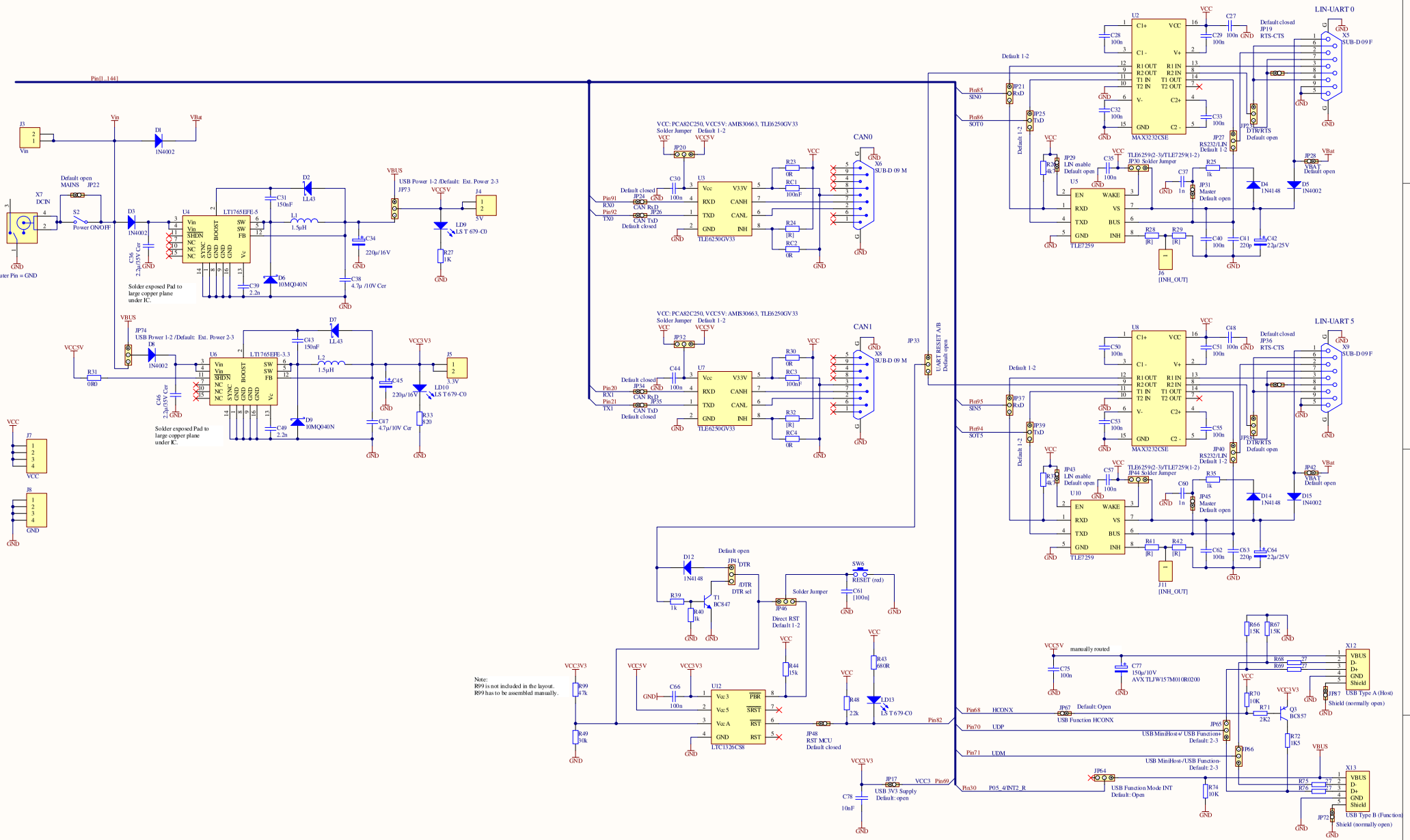

All parts with values in [brackets] are not assembled.

FUJITSU THE POSSIBILITIES ARE INFINITE	Title:	SK-96330-144PMC	V1.0
	Drawn by:	C. Eyrich / H. Wech	
	Date:	23.6.2008	
	Sheet:	2 of 2	DocRev: V1.2
	File:	SK-96330-144PMC_V10_p02.SchDoc	

Fujitsu Microelectronics Europe GmbH
http://mcu.emea.fujitsu.com
micro_info@fme.fujitsu.com